Datasheet

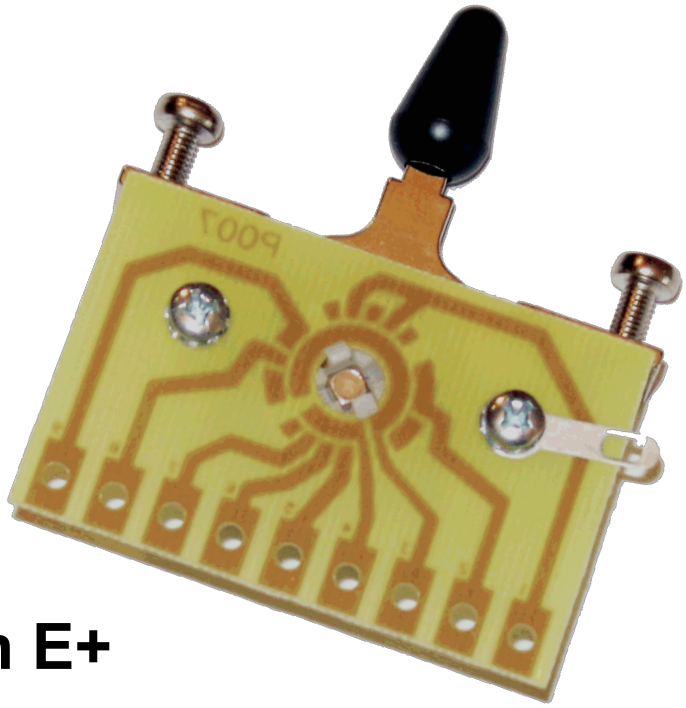

Megaswitch Version E+

Version E+ is recommended for the following pickup combinations:

- Humbucker / singlecoil / singlecoil (equal polarity)
- Humbucker / singlecoil / humbucker
- Bass mit 2 pickups
- Singlecoil / humbucker (like Telecaster custom)
- Humbucker bridge / singlecoil neck

Die Version E+ has the following advantages compared toVersion E:

The Megaswitch E+ is an evolution of the Megaswitch E with the following advantages: used in a guitar with either 2 humbuckers or 2 humbuckers and 1 singlecoil pickup, it gives you the option for the middle position to switch the outside pickups either as humbuckers or split. Furthermore, used in a guitar with 1 humbucker and 2 singlecoil pickups with coils of equal polarity, you can split the humbucker by connecting its serial link towards ground only.
You can also get 5 interesting sounds out of a guitar with a humbucker and a singlecoil pickup. (e.g. Telecaster Custom)
The Megaswitch E+ can also be used in bass guitars as a blend control.

Sounds and wiring: Humbucker / singlecoil / singlecoil (equal polarity)

Position	Sound
1	bridge humbucker
2	bridge pickup split (bridge coil) + middle pickup
3	bridge pickup split (bridge coil) + neck pickup
4	middle pickup + neck pickup
5	neck pickup

Lug	Wires
1	hot wire of middle pickup
2	hot wire of neck pickup
3	output
4	ground
5	empty
6	connect to lug # 7
7	serial link of bridge pickup, connect to lug # 6
8	connect to lug # 9
9	hot wire of bridge pickup, connect to lug # 8

Sounds and wiring: Humbucker / singlecoil / humbucker (middle position not split)

Position	Sound
1	bridge humbucker
2	bridge pickup split + middle pickup
3	bridge humbucker + neck humbucker
4	middle pickup + neck pickup split
5	neck humbucker

Lug	Wires
1	hot wire of middle pickup
2	hot wire of neck pickup
3	output
4	ground
5	serial link of neck pickup
6	empty
7	serial link of bridge pickup
8	connect to lug # 9
9	hot wire of bridge pickup, connect to lug # 8

Sounds and wiring: Bass with 2 pickups

This replaces the blend control often used on basses. It requires a trim potentiometer or preset resistor for each pickup. Pot or resistor values have to be chosen depending on pickups and personal taste.

Position	Sound
1	bridge pickup alone
2	bridge pickup with trimmed neck pickup
3	both pickups full
4	neck pickup with trimmed bridge pickup
5	neck pickup alone

Lötöse	Anschluss
1	empty
2	neck pickup
3	output (connect to lug # 4)
4	output (connect to lug # 3)
5	connect to lug # 8 over trim control or resistor
6	empty
7	connect to lug # 2 over trim control or resistor
8	bridge pickup (connect to lug # 9)
9	bridge pickup (connect to lug # 8)

Sounds und wiring: Singlecoil / humbucker (like Telecaster Custom)

Position	Sound
1	bridge pickup
2	bridge pickup + neck humbucker
3	bridge pickup + neck humbucker split
4	neckhumbucker split
5	neckhumbucker

Lug	Wires
1	hot wire of neck humbucker
2	hot wire of neck humbucker (connect to lug # 1)
3	output
4	ground
5	serial link of neck humbucker
6	serial link of neck humbucker (connect to lug # 5)
7	empty
8	hot wire of bridge pickup
9	hot wire of bridge pickup (connect to lug # 8)

Sounds and wiring: humbucker (bridge) / singlecoil (neck)

Position	Sound
1	bridge humbucker
2	bridge humbucker split
3	bridge humbucker split + neck pickup
4	bridge humbucker + neck pickup
5	neck pickup

Lug	Wires
1	hot wire of bridge humbucker
2	neck pickup
3	output
4	ground
5	empty
6	serial link of bridge humbucker
7	serial link of bridge humbucker (connect to lug # 6)
8	hot wire of bridge pickup (connect to lug # 1)
9	hot wire of bridge pickup (connect to lug # 1 and 8)